Chapter 10 (Part 1) – Capacitor Charge & Discharge Using DC Source

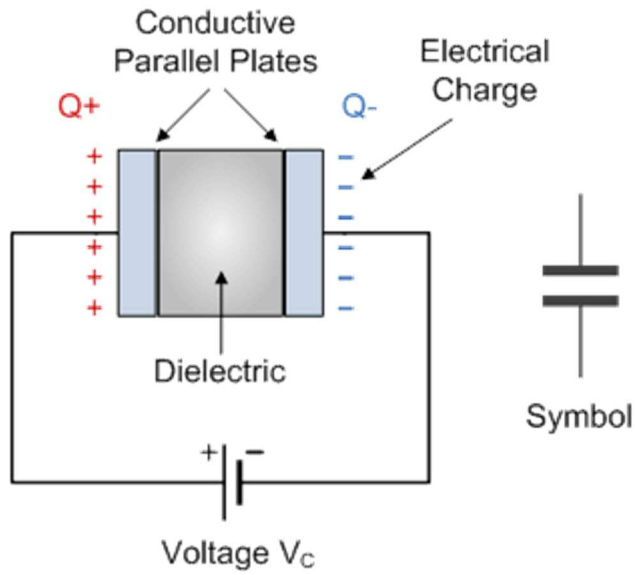

Definition: A capacitor is a dipole formed by 2 conductive metal plates separated by an insulator called a dielectric.

The 2 metal plates are called armatures of the capacitor.

The dielectric is an insulating substance separating 2 different electrical species.

Note: by convention the potential difference (voltage) at the terminals of the capacitor is noted $u_c = u_{+-}$

Capacity of a capacitor: The capacity of a capacitor is given by: $C = \frac{Q}{U}$, where:

- Q is the amount of charge carried by the positive armature expressed in coulombs (C).
- U is the voltage across the terminals of the capacitor expressed in Volts (V).

The unit of capacity in the SI system is the Farad (F).

The submultiples of the farad are: millifarad (mF), microfarad (µF), nano-farad (nF) and picofarad (pF).

$1mF = 10^{-3}$ F $1\mu F = 10^{-6}$ F $1nF = 10^{-9}$ F $1pF = 10^{-12}$ F

Energy stored by a capacitor:

The capacitor stores electrical energy. This energy is given by the relationship:

$E = \frac{1}{2} \times Q \times U_c = \frac{1}{2} \times C \times U_c^2 = \frac{1}{2} \times \frac{Q^2}{C}$ (with $Q = C.U_c$)

The SI unit of energy is the joule (J).

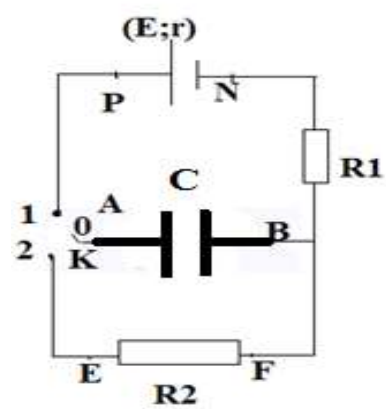

Charging and discharging a capacitor using a Voltage Generator:

1-Capacitor charge:

At t = 0, where $q_A = q_B = 0$ (so $u_c = 0$), we place the commutator K on position 1

Differential equation in u_c :

According to the law of addition of voltages: $u_{PN} = u_{PA} + u_{AB} + u_{BC} + u_{CN}$

$\Rightarrow u_G = u_c + u_{R_1}$

$\Rightarrow E - ri = u_c + R_1.i$

$\Rightarrow E = u_c + (r + R_1).i$

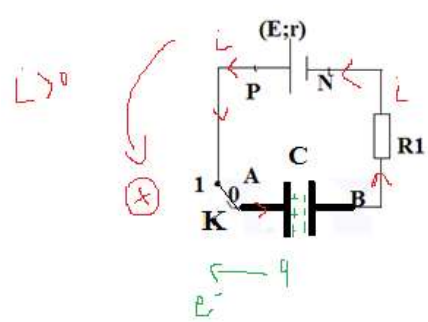

Let: $R = r + R_1$

We get then: $u_c + R.i = E$

Since $i = \frac{dq}{dt} \Rightarrow i = \frac{d}{dt}(C.u_c) = C.\frac{du_c}{dt} > 0$

Finally: $u_c + RC.\frac{du_c}{dt} = E$

This is a differential equation, in u_c, of first order and with second member.

<u>Solution of the differential equation</u>:

$u_c = A + Be^{-\frac{t}{\tau}}$ where A, B and τ are constants to determine

$$\frac{du_c}{dt} = -\frac{B}{\tau}.e^{-\frac{t}{\tau}}$$

u_c and $\frac{du_c}{dt}$ verify the differential equation $u_c + RC.\frac{du_c}{dt} = E$

Then $A + Be^{-\frac{t}{\tau}} + RC\left(-\frac{B}{\tau}.e^{-\frac{t}{\tau}}\right) = E$

Or $A + Be^{-\frac{t}{\tau}} = E + RC\frac{B}{\tau}.e^{-\frac{t}{\tau}}$

By identification: $A = E = e.m.f$ of the generator

And $Be^{-\frac{t}{\tau}} = RC\frac{B}{\tau}.e^{-\frac{t}{\tau}}$ so $1 = \frac{RC}{\tau}$ or $\tau = R.C$

Briefly: $A = E$ and $\tau = RC = (r + R_1).C$

But at $t_0 = 0$, the capacitor was not charged yet, so q = 0 and $u_c = 0 \Rightarrow 0 = A + Be^0 \Rightarrow B = -A = -E$

Finally: $u_c = E - Ee^{-\frac{t}{RC}} = E(1 - e^{-\frac{t}{RC}})$

<u>Dimension of τ (Unit of τ)</u>

$\tau = R.C$ so $[\tau] = [R] \times [C]$

Or $R = \frac{U}{I}$ and $C = \frac{Q}{U}$

Then $[\tau] = \frac{[U]}{[I]} \times \frac{[Q]}{[U]} = \frac{[U]}{[I]} \times \frac{[I]\times[t]}{[U]} = \frac{V\times A\times s}{V\times A} = s$

As result τ is a time constant; the SI unit of τ is the second (s).

Graph representing the variation of u_c-versus-t

We got: $u_c = E(1 - e^{-\frac{t}{RC}})$ where $\tau = RC = (R_1 + r).C$

For $t_0 = 0$; $u_c = E\left(1 - e^{\frac{-0}{\tau}}\right) = E(1 - e^{-0}) = 0\,V$

For $t = \tau$; $u_c = E\left(1 - e^{\frac{-\tau}{\tau}}\right) = E(1 - e^{-1}) = 0.63E = 63\%E$

For $t = 2\tau$; $u_c = E\left(1 - e^{\frac{-2\tau}{\tau}}\right) = E(1 - e^{-2}) = 0.86E = 86\%E$

For $t = 5\tau$; $u_c = E\left(1 - e^{\frac{-5\tau}{\tau}}\right) = E(1 - e^{-5}) = 0.99E = 99\%E$

When t approaches $+\infty$, u_c approaches then E so $u_c = E$ is a H.A.

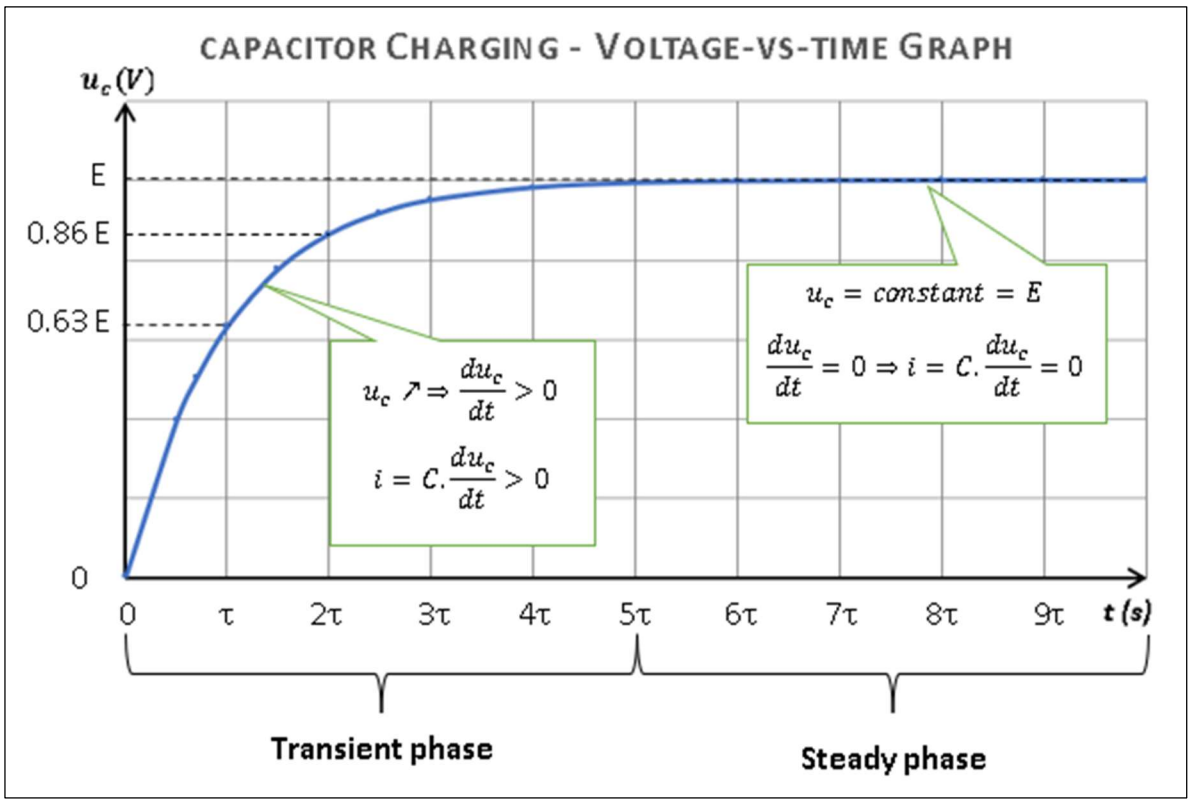

Methods to determine the time constant τ

1st method: by the relation $\tau = R.C$

2nd method: for $t = \tau$; $u_c = 0.63E$

3rd method: the tangent at $t_0 = 0$ at the curve of $u_c = f(t)$ intercepts the horizontal asymptote at the point A of abscissa $t = \tau$.

4th method: the slope of the tangent at the curve of $u_c = f(t)$ at $t_0 = 0$: $slope = \tan(\alpha) = \frac{AH}{OH} = \frac{E}{\tau}$

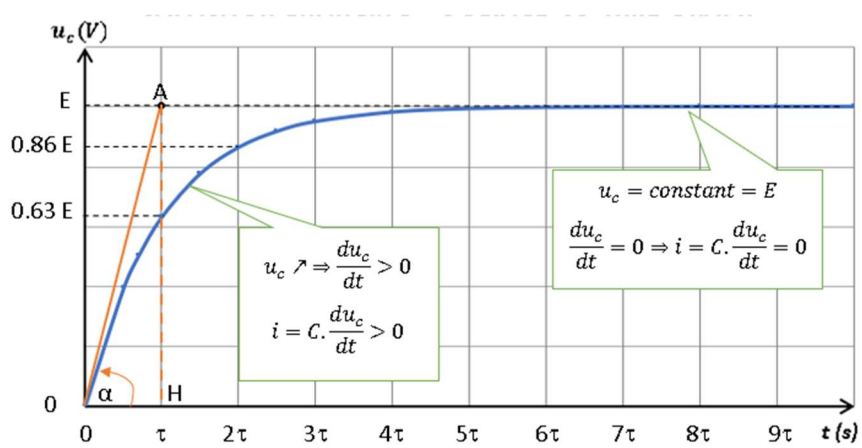

Remark

$\frac{du_c}{dt}$ is the slope of the tangent at the curve of $u_c = f(t)$ at an instant t; we can determine the value of $\frac{du_c}{dt}$ either by using the differential equation, or by deriving u_c relative to t, or by calculating the slope of the tangent considering 2 points of the tangent given on the figure.

2-Discharge of the capacitor through a resistor

At t = 0 (where $u_c = U_{c(max)}$ = E and $q_A = -q_B = Q_{max} = C.E$), we place the commutator K at position 2

By the law of uniqueness of voltages:

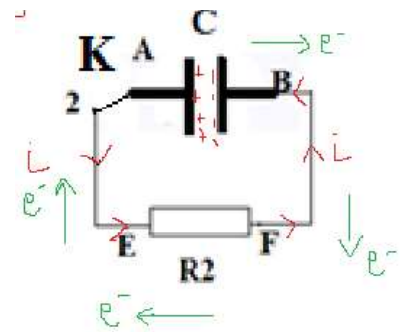

$u_{AB} = u_{EF}$ so $u_c = u_{R_2}$ or $u_c = R_2.i$

Or $i = -\frac{dq}{dt} = -\frac{d}{dt}(Cu_c) = -C\frac{du_c}{dt}$

So $u_c = -R_2\, C\frac{du_c}{dt}$

Then: $u_c + R_2C.\frac{du_c}{dt} = 0$

This is a differential equation, in u_c, of first order and without second member.

Solution of differential equation

$u_c = A.e^{-\frac{t}{\tau}}$ where A and τ are 2 constants to be determined

$\frac{du_c}{dt} = -\frac{A}{\tau}e^{-\frac{t}{\tau}}$

u_c and $\frac{du_c}{dt}$ verify the differential equation $u_c + R_2C.\frac{du_c}{dt} = 0$

Then $Ae^{-\frac{t}{\tau}} + R_2C\left(\frac{A}{\tau}e^{-\frac{t}{\tau}}\right) = 0$

$\Rightarrow Ae^{-\frac{t}{\tau}} = -R_2C\frac{A}{\tau}e^{-\frac{t}{\tau}} \Rightarrow A = R_2C.\frac{A}{\tau} \Rightarrow \tau = R_2C$

In addition, at $t_0 = 0$; $u_c = E$ then $E = A.e^0 \Rightarrow A = E$

Finally, $u_C(t) = E.e^{-\frac{t}{\tau}}$ with $\tau = R_2$.C

Graph representing the variation of u_c in term of time

We have $u_C(t) = E.e^{-\frac{t}{\tau}}$ with $\tau = R_2$.C

For $t_0 = 0$; $u_C = E(e^{-0}) = E(V)$

For t = τ; $u_C = E(e^{-1}) = 0.37E$

For t = 2τ; $u_C = E(e^{-2}) = 0.135E$

For t = 5τ; $u_C = E(e^{-5}) = 6.7 \times 10^{-3}$E

When t tends to $+\infty$, u_C tends to 0

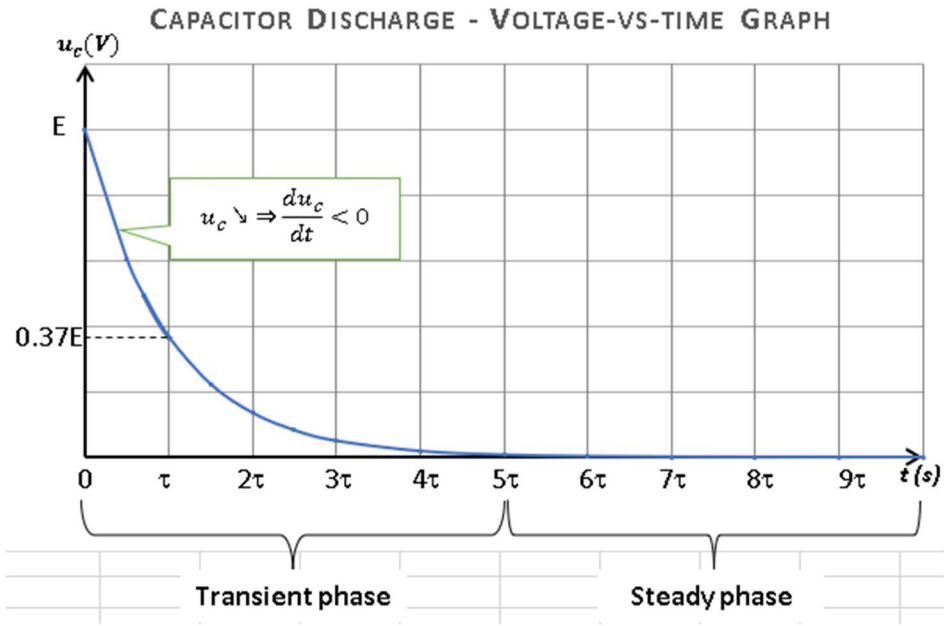

Methods to determine the time constant τ

1st method: by the relation $\tau = R_2C$

2nd method: for t = τ $u_C = 0.37E$

3rd method: the tangent at $t_0 = 0$ at the curve $u_C = f(t)$ intercepts the horizontal asymptote at the point A of abscissa t = τ.

4th method: the slope of the tangent at the curve $u_C = f(t)$ at $t_0 = 0$: $slope = \tan(\alpha) = -\tan(\beta) = -\frac{E}{\tau}$

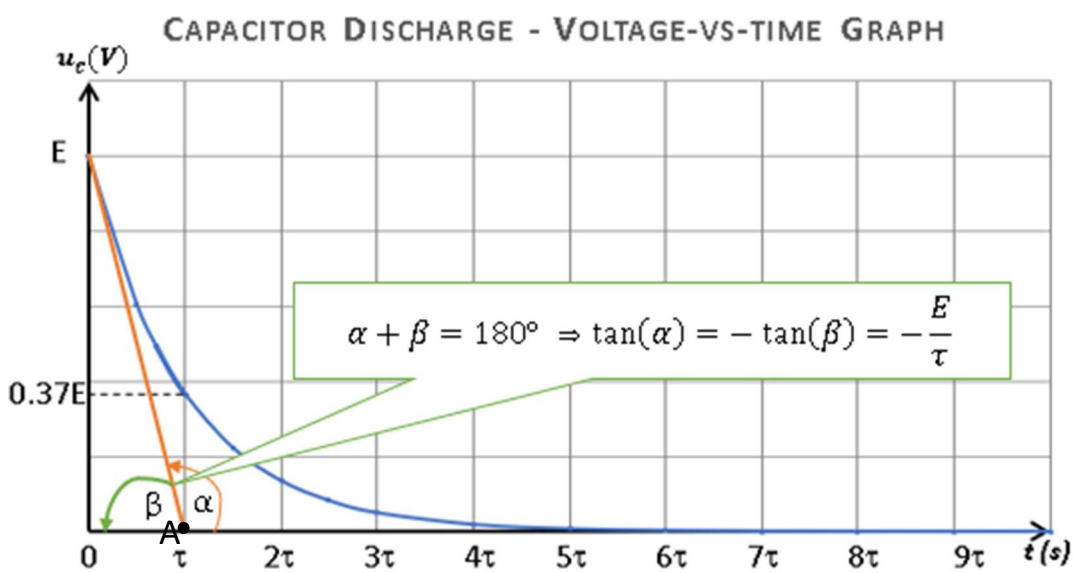

Definition of the time constant τ

This is the time after which the voltage at the terminals of the capacitor reaches 63 /100 of its maximum value during charging and 37 /100 of its maximum value during discharge